Radiant Heaters

The RAYMAX® Family

Watlow's diverse RAYMAX® heater line allows you to solve virtually any application that requires radiant heat. Our capabilities cover a wide range of needs, from contamination-resistant surfaces, to fast responding high temperature panels, to replaceable tubular elements.

Applying radiant heaters can be complicated. Watlow's engineering staff has the level of training and expertise required to help meet your application requirements, providing a high degree of technical support such as conducting testing for your application at our facility, calculating your watt density and temperature requirements, and recommending system components such as sensors and controllers. With our experience in a wide range of industries, chances are Watlow has already helped someone handle a radiant heating application like yours.

Features and Benefits

- **The full RAYMAX line** offers a variety of styles and capabilities to match the ideal temperature and watt density requirements of your application.
- **Engineering and application support** from Watlow makes your projects run more smoothly.
- **Custom designs** can be quickly adapted for particular needs such as special wattage zoning.
- **Watlow sensors and controllers** are completely compatible with RAYMAX heaters for a single source thermal system that is reliable and designed just for your application.

Applications

- Thermoforming
- Food warming
- Paint and epoxy curing
- Heat treating
- High temperature furnaces
- Tempering and annealing processes

Caution: *Fire Hazard*

Radiant heaters must not be operated in the presence of flammable vapors, gases or combustible materials without proper ventilation and safety precautions. Radiant heaters must be properly wired and controlled to comply with all applicable electrical codes.

Radiant Heaters

The RAYMAX Family

Panel Variations

Low Profile

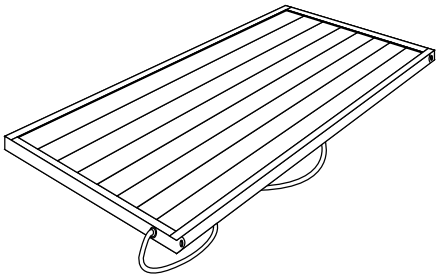

This design may be required where mounting space is limited, for example, when converting existing equipment or designs to radiant panels.

Available options may vary from the standard units when you specify a low profile design. Consult Watlow for further information.

Available with RAYMAX 1010, 1120, 1220, 1330, and 2030.

Zoning

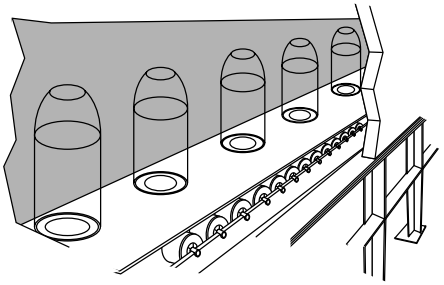

Watt densities can be varied across the entire width of RAYMAX heaters. If desired, each zone can have an individually controlled power supply.

Zoning can be very valuable when part of the product requires more heat, or when you must compensate for heat losses at the edges. By separately turning off part of the heated width, you can adjust for various widths of material.

Available with RAYMAX 1010, 1120, 1220, 1330, and 2030.

The RAYMAX Family

Mounting Accessories

Application note: Allow for some thermal expansion of the heater case during operation. An expansion of up to one percent can occur when the case reaches its normal maximum limit of 1100°F (595°C). If your equipment has mounting screws to connect to the slots in the mounting legs, allow for a small amount of extra length. If you are using mounting holes to interface with the mounting studs on the back of the RAYMAX case, make sure your holes are oversized. Also, use washers and avoid overtightening.

Mounting Studs

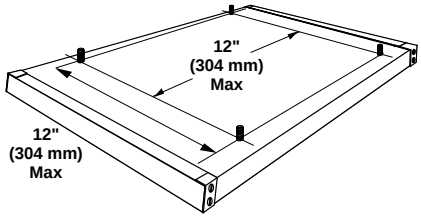

Standard ¼ X 20 X 1 ½ inch (M6 X 40) steel studs are welded to the case. For best support, studs should be approximately located on 12 inch centers. Consult Watlow for exact locations on specific heaters.

Available with RAYMAX 1010, 1120, 1220, 1330, and 2030.

Mounting Legs

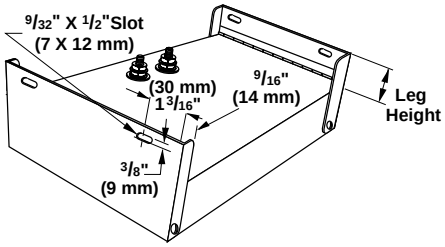

Mounting legs are extensions of the steel end caps with mounting slots for bolting directly to field support members. There is no extra charge for legs; they can be supplied in half inch increment from 0.5 inch (12.5 mm) to three inches (76 mm). No slots are provided in legs less than one inch (25 mm) long.

For panels over 24 inches (610 mm) long, mounting studs are recommended for the best panel support.

Available with RAYMAX 1120, 1220, and 2030.

Terminal Accessories

Special Terminal Locations

If the standard terminal locations shown will not meet your needs special locations can be designed.

Available with RAYMAX 1010, 1120, 1220, 1330, and 2030.

Terminal Box

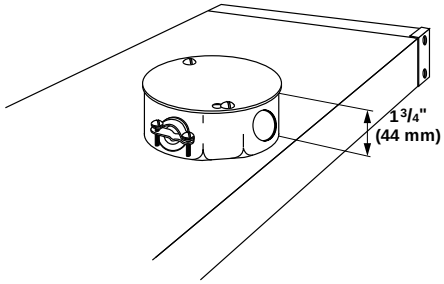

To protect electrical connections, a standard NEMA terminal box is available. The standard size is 4 X 4 X 1 ⅝ inches (102 X 102 X 41 mm) with knockouts for ½ inch (12.5 mm) conduit. Other NEMA sizes are also available.

Care should be taken to use lead wire capable of withstanding the ambient temperatures.

Available with RAYMAX 1010, 1120, 1220, 1330, and 2030.

Wiring Raceway

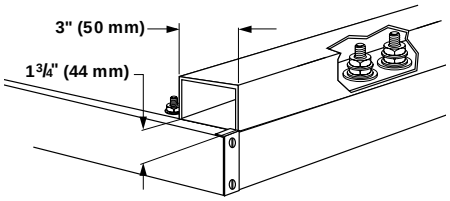

Custom designed to your specific requirements, a steel raceway provides electrical and physical protection for all terminal connections. This can be particularly useful for multi-zone panels.

Available with RAYMAX 1010, 1120, 1220, 1330, and 2030.

Radiant Heaters

The RAYMAX Family

Temperature Control

Thermowells

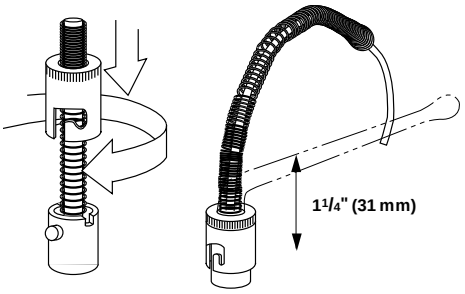

A thermowell allows you to use a thermocouple with a bayonet fitting to monitor heater temperature. The thermowell is located on the back of the panel to allow easy access for thermocouple replacement. Spring tension holds the tip of the thermocouple in contact for close control of the heater temperature. Thermocouple not included.

Available with RAYMAX 1010, 1120, and 1330.

Thermocouple Clamps

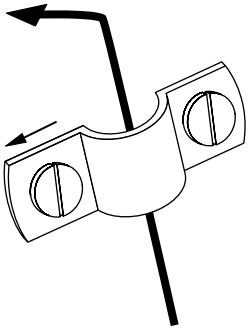

A thermocouple mounting clamp can be provided on the end of the heater case. The clamp is suitable for use with ⅛ inch (3.175 mm) and ¼ inch (6.35 mm) O.D. sheath thermocouples, which should be bent 90° so that the sensing tip is just above and lightly touching the hot face at an element location.

Available with RAYMAX 1220 and 2030.

Welded Thermocouple

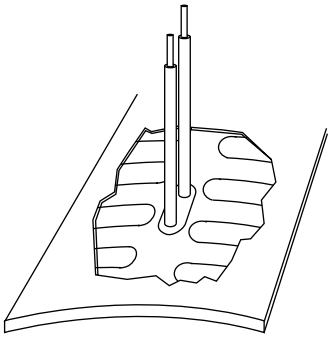

A thermocouple junction is welded to the emitting surface to provide optimum temperature sensing accuracy and responsiveness. This option permits the actual radiating face temperature to be precisely monitored and controlled.

Available with RAYMAX 1010, 1120, and 1330.

Thermocouple Pocket

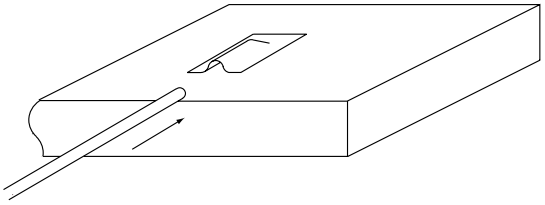

A thermocouple pocket is welded to the emitting surface. The pocket accepts a 0.063 inch (1.6 mm) diameter thermocouple (not included). This option provides accurate temperature sensing and easy thermocouple replacement.

Available with RAYMAX 1010, 1120, and 1330.

Radiant Heaters

RAYMAX® 1010

Designed to resist contamination, the RAYMAX® 1010 is ideal for use in screen printing, food warming and other low heat applications. The heater's "sealed face" keeps contaminants away from the heating element, and this metal surface can be easily wiped or brushed clean whenever needed.

The rugged all-metal construction results in a shock-proof, shatter-proof heater that is durable and long lasting. No fragile glass, ceramic or fiber is used.

Performance Capabilities

- Face temperature: 1000°F (540°C) max.
- Watt densities: 10 W/in^2 (1.5 W/cm^2) max.
- 50 amps maximum

Features and Benefits

- **Uniform full surface heat** source provides better, more even heat.
- **No reflectors** to clean or replace.
- **Accurate, repeatable temperature** sensing options.
- **Convenient ready-to-use package** makes installation easier.
- **One inch thick** backside insulation reduces losses.
- **UL® component recognized** versions are available.
- **Totally sealed version available** suitable for hose down applications.

Applications

- Drying screen-printed textiles
- Curing process coatings on circuit boards
- Food warming/cooking
- Epoxy curing
- Thermoforming

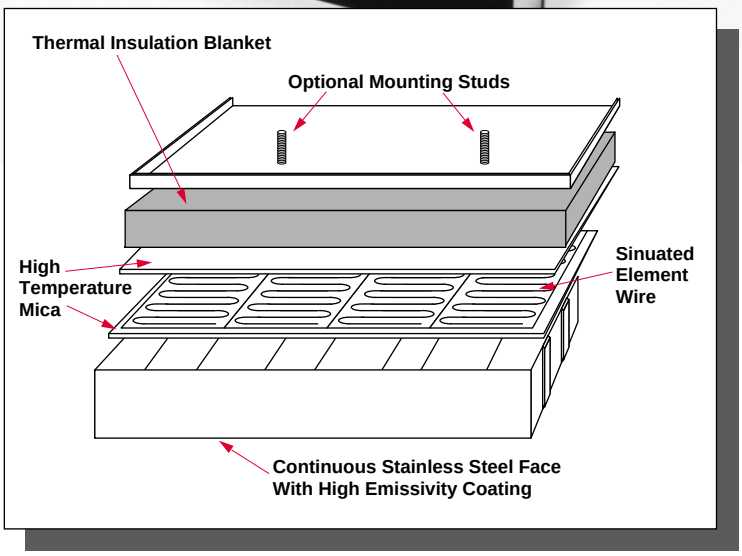

UL® is a registered trademark of Underwriter's Laboratories, Inc.

Radiant Heaters

RAYMAX 1010

Applications and Technical Data

Sizes and Ratings

Thickness: 1.87 inch (47.4 mm)

Volts: 120, 240, 480V~(ac), 1-phase. 3-phase available on unit widths divisible by 6.

Watt density: Up to 10 W/in^2 (1.5 W/cm^2), 50 amps max.

Face temperature: Up to 1000°F (540°C)

Typical peak energy wavelength: 3.5-4 microns

Specifications

Heater Dimensions	Min.	Max.	Increments
Width: inches (mm)	4 (101.6)	20 (508)	2 (50.8)
Length: inches (mm)	10 (254)	68 (1727.2)	any
Area: in^2 (cm^2)		864 (5574)	any

Note: Less than maximum length X width may exceed maximum area.

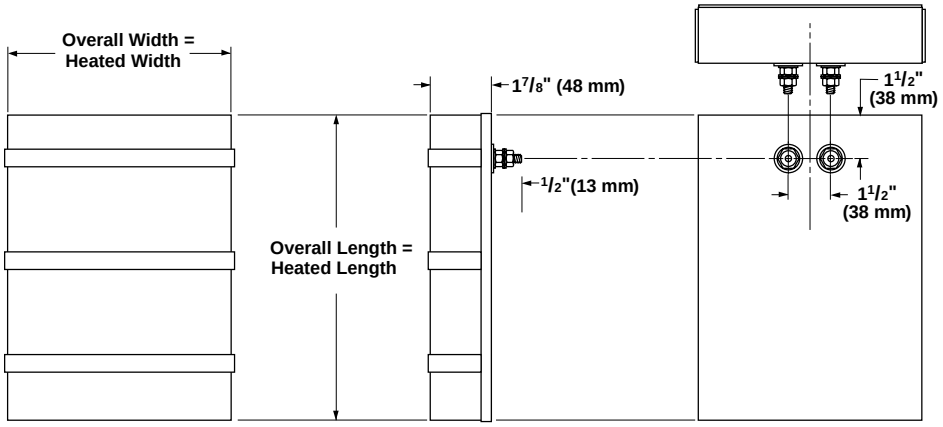

F.O.B.: St. Louis, Missouri

Options

- Terminal box
- Thermowell (VAT style thermocouple required)
- Thermocouple pocket (thermocouple required)
- Thermocouple welded to hot face
- Mounting studs
- Totally sealed construction
- Food-safe surface treatment

How to Order

All units are **made-to-order**. Please specify the following information when placing an order:

- Width and length
- Total wattage
- Voltage and phase
- Mounting studs, if desired
- Terminal location, if non-standard
- Terminal box, if desired
- Internally welded thermocouple or thermowell, if desired

Availability

Please consult Watlow for lead time required.

Quick Ship • *Next day shipment on all stock units.*

Radiant Heaters

RAYMAX® 1120

The RAYMAX® 1120 is a lightweight, yet sturdy and durable radiant heater panel. The emitter sheath is stainless steel with a black coating that makes it a highly efficient radiating surface. In addition, the heater's low mass allows rapid start-up and fast response to controls.

The patented RAYMAX heater features one inch (25 mm) wide emitter strips that are individually replaceable for lower maintenance costs. Weighing only 5.5 lbs/ft^2 (26.8 kg/m^2), the heater is easy to mount.

Performance Capabilities

- Face temperature: 1100°F (595°C) max.
- Watt density: 20 W/in^2 (3 W/cm^2) max.

Features and Benefits

- **Replaceable emitters** reduce your costs.
- **High temperature mica** electrically insulates nickel chromium resistance wire, permitting longer heater life.
- **High emissivity coating** on emitter strips improves radiant heating efficiency.
- **Thermal insulation,** one inch thick, backs the emitter strips to reduce backside losses.
- **Uniform full surface heat source** provides better, more even heat.
- **Special requirements** are easily met with custom sizes and ratings.
- **Next day shipment** is available on stock sizes.

Applications

- Thermoforming
- Textile drying
- Paint curing
- Powder coating fusing
- Shrink wrapping
- Circuit board soldering

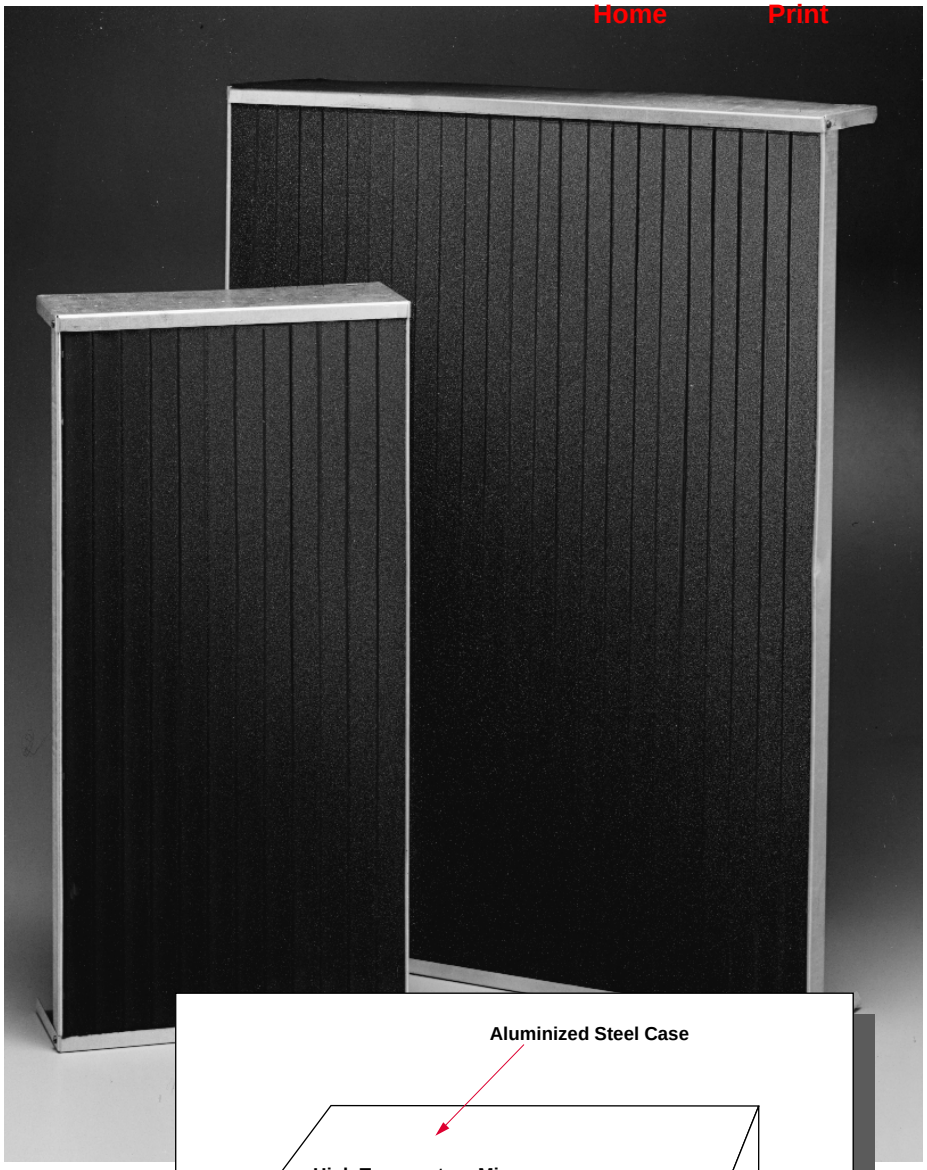

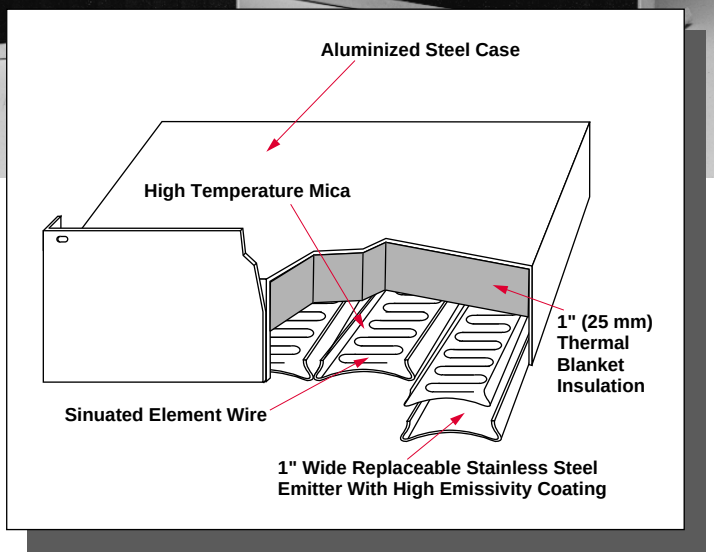

Radiant Heaters

RAYMAX 1120

Applications and Technical Data

Face Temperature: 1100°F maximum (595°C)

Wattage: Watt densities up to 20 W/in² (3 W/cm²)

Standard Voltage: 120, 240, 480V~(ac), 1-phase. Balanced 3-phase available on unit widths divisible by three. Other voltages are available.

Terminals: Non-standard locations are available. Please specify.

Standard Dimensions: ±1/16 inch (0.0625 mm)

Typical Peak Energy Wavelength: 3-3.5 microns

Specifications

Heater Dimensions	Min.	Max.	Increments
Width: inches (mm)	1 (25.4)	36 (914.4)	1 (25.4)
Length: inches (mm)	6 (152.4)	70 (1778)	any
Area: in² (cm²)	6 (38.7)	864 (5574.2)	any

Note: Less than maximum length X width may exceed maximum area.

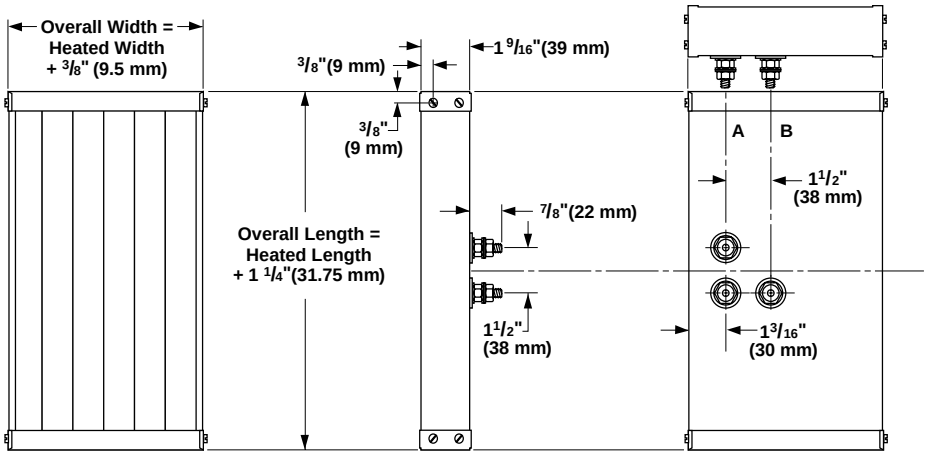

F.O.B.: St. Louis, Missouri

Panel Overall Size in (mm)		Panel Heated Size in (mm)				Watt Density		Approx. Net Wt.		Code
Width	Length	Width	Length	Volts	Watts	W/in²	(W/cm²)	lbs	(kg)	Availability	No.
6 3/8	(161.93) 25 1/4	(641.35) 6	(152.4) 24	(609.6) 240	2880	20	(3.1)	6	(2.7)	Stock	**P0624AX050**
12 3/8	(314.33) 13 1/4	(336.55) 12	(304.8) 12	(304.8) 240	2880	20	(3.1)	6	(2.7)	Stock	**P1212AX030**
12 3/8	(314.33) 25 1/4	(641.35) 12	(304.8) 24	(609.6) 240	5760	20	(3.1)	12	(5.4)	Stock	**P1224AX062**
12 3/8	(314.33) 49 1/4	(1250.95) 12	(304.8) 48	(1219.2) 480 3-phase	11520	20	(3.1)	24	(10.8)	Stock	**P1248AX073**

Note:
- Panels are equipped with terminal box, thermocouple well with bayonet adaptor and mounting studs.
- Watlow stock radiant panels must be properly applied for safe operation.
- Please consult Watlow with your application before ordering.

How to Order

To order your stock RAYMAX heater, specify:

- RAYMAX 1120
- Quantity
- Watlow code number

If our stock units do not meet your application needs, Watlow can manufacture RAYMAX heaters to your special requirements. For **made-to-order** heaters, specify the following:

- Heated width and length. Three-phase panels must have width divisible by three.
- Total wattage of each panel.
- Exact voltage and phase. A five percent variation in voltage at the oven will cause a 10 percent variation in power.
- Zoning. Indicate dimensions and wattage of each zone.
- Mounting legs or mounting studs, if desired. For studs, give number and location or indicate standard location.
- Terminal location if non-standard.
- Terminal box or wire raceway, if required.

Supplying a drawing with an order or request for quotation can be very helpful in clarifying design information.

Availability

Stock: Next day shipment

Made-to-Order: Consult Watlow

Radiant Heaters

RAYMAX® 1220 and 2030

Easy to install and capable of high surface temperatures, the RAYMAX® 1220 and 2030 are ideal for many process heating applications requiring “hot face” temperatures above 1000°F (540°C).

Each unit consists of a ceramic fiber heater mounted in a 2.5 inch (64 mm) deep sheet metal case that provides thermal insulation. The case includes post terminals for electrical connections and provides a mounting system that can be used with virtually any flat ceramic fiber unit, whether it is a stock, standard or custom size. Since any of the flat unit heating element configurations can be used—exposed sinuated, embedded coil or foil elements—watt density and temperature capabilities can be tailored to meet a specific radiant application.

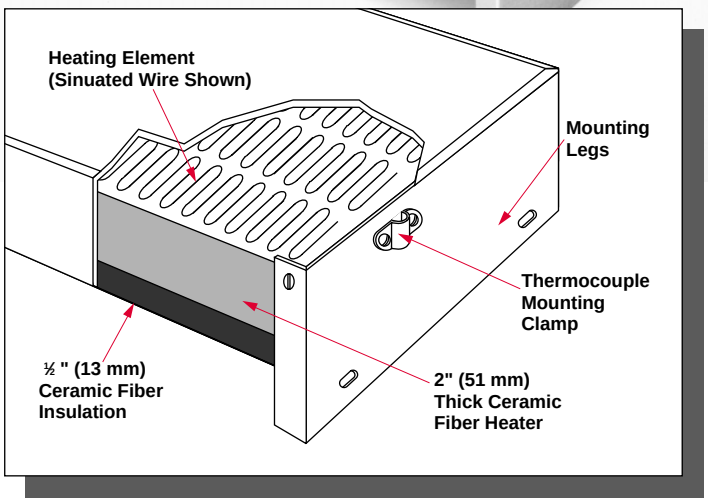

Performance Capabilities

- RAYMAX 2030 (uses sinuated or coil elements): temperatures up to 2000°F (1095°C); watt densities up to 30 W/in^2 (4.7 W/cm^2)
- RAYMAX 1220 (uses an etched foil element): temperatures up to 1200°F (650°C); watt densities up to 20 W/in^2 (3 W/cm^2)

Features and Benefits

- **Lightweight, low mass design** allows fast response to controls.
- **High efficiency** results from high degree of self insulation with 2.5 inch (64 mm) thick mounting case.
- **Adaptable** with any stock or standard sized flat ceramic fiber units.
- **Thermocouple mounting clamp** makes process system control easier.
- **Aluminized steel case** can handle temperatures up to 1100°F (595°C). Other case materials are available, depending on the expected exposure of the case to other operating conditions.
- **Special hot face** heating patterns can be designed specifically for an application using an etched foil RAYMAX 1220.

Applications

- Conveyor furnaces
- High temperature vessel heating
- Tempering and annealing processes for glass, wire, ceramics and metals
- Coating, curing and drying of inks, paints, plastics and films

Radiant Heaters

RAYMAX 1220 and 2030

Applications and Technical Data

Specifications

Weight: Under 6.5 lbs/ft^2 (31.75 kg/m^2)

Voltage and Wattage: Ratings are based on the ceramic fiber heater module which is mounted in the case. Up to 600V~(ac) is possible.

Terminals: Terminals are ¼-20 threaded studs. Two terminals plus ground for single-phase, and three terminals plus ground for three-phase, are standard. These will be located on the center line of the length unless otherwise specified. Terminals can be located anywhere along lines A and B (see illustration to the right), but not closer than two inches (51 mm) to the case ends.

Mounting Legs: One inch (25 mm) standard; three inches (76 mm) optional from stock. For made-to-order units, mounting legs can be supplied in any incremental length **L** from ½ inch (13 mm) to three inches (76 mm). No slots are provided in legs less than one inch long.

Heater Dimensions	Min.	Max.	Increments
Width: inches (mm)	2 (51)	30 (760)	Any
Length: inches (mm)	6 (152)	52 (1320)	Any

Note: Units will be ¼ inch (6 mm) wider than the nominal size of the ceramic fiber heater. Overall length is equal to heater length, but thermocouple clamp not included in length.

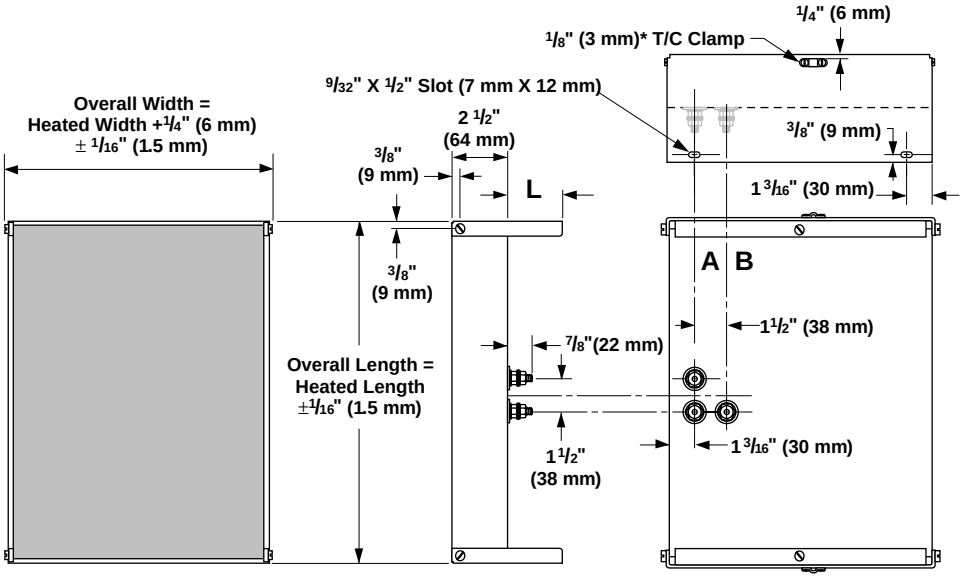

Application Hints

A thermocouple mounting clamp will be provided on one end of the case, with holes on both ends for alternate locations. The standard clamp can be used with ⅛ inch (3 mm) O.D. sheath thermocouples. The standard clamp is 3/16 inch (4.8 mm) high, but can be removed for flush mounting*.

The maximum recommended surface temperature of the heater is based on the rating of the ceramic fiber heater module. This can vary from 2000°F (1095°C) at lower watt densities, to higher watt densities at reduced surface temperatures. Note that maximum wattages cannot be achieved at the maximum temperatures simultaneously.

* ⅛ inch (3 mm) is standard. 3/16 inch (4.8 mm) and ¼ inch (6 mm) are available upon request.

Options

Several options are available with RAYMAX 1220 and 2030 models. From the following list, the first four are illustrated on **pages 204 to 205**. Consult Watlow for more information on any of the options.

- Single-phase non-standard location power terminals
- Terminal box
- Zoning
- Mounting studs and legs
- Three-phase construction
- Thermocouple mounting tubes
- Alternate case materials

See ceramic fiber heaters, pages 155 and 158, for a complete listing of all the flat panel sizes available.

RAYMAX 1220

Ceramic Fiber, with Foil Element

Panel Overall Size ± 1/16 in (1.5mm)		Panel Nominal Heated Size in (mm)		Volts	Watts	Watt Density		Approx. Net Wt.		Availability	Code No.
Width	Length ①	Width	Length			W/in²	(W/cm²)	lbs	(kg)		
4 1/4 (110)	12 (305)	4 (102)	12 (305)	120	950	19.8	(3.1)	2.8	(1.3)	Stock	**VP504A12F**
4 1/4 (110)	24 (610)	4 (102)	24 (610)	240	1900	19.8	(3.1)	4.8	(2.2)	Stock	**VP504A24F**
8 1/4 (210)	12 (305)	8 (200)	12 (305)	240	1900	19.8	(3.1)	4.5	(2.1)	Stock	**VP508A12F**
8 1/4 (210)	24 (610)	8 (200)	24 (610)	240	3800	19.8	(3.1)	7.7	(3.5)	Standard	**VP508A24F**

All units in this table are suitable for use up to 1200°F (650°C) maximum surface temperature.

① Thermocouple clasp is not included in the length.

RAYMAX 2030

Ceramic Fiber, with Sinuated Element

Nominal Heated Width		Nominal Heated Length		Volts	Watts	Watt Density		Approx Net Wt.		Availability	Code No.
in	(mm)	in	(mm)			W/in²	(W/cm²)	lbs	(kg)		
4	(102)	6	(152)	60	500	20.8	(3.2)	1.9	(0.9)	Standard	**VP504A06T**
		12	(305)	120	1050	21.9	(3.4)	3.1	(1.4)	Stock	**VP504A12T**
		18	(460)	120	1500	20.8	(3.2)	4.1	(1.9)	Standard	**VP504A18T**
		24	(610)	240	2100	21.9	(3.4)	5.2	(2.4)	Stock	**VP504A24T**
		30	(760)	240	2500	20.8	(3.2)	6.3	(2.9)	Standard	**VP504A30T**
		36	(915)	240	3000	20.8	(3.2)	7.4	(3.3)	Standard	**VP504A36T**
6	(152)	6	(152)	60	650	18.1	(2.8)	2.4	(1.1)	Standard	**VP506A06T**
		12	(305)	120	1250	17.4	(2.7)	4.1	(1.9)	Standard	**VP506A12T**
		18	(460)	240	2000	18.5	(2.9)	5.8	(2.6)	Standard	**VP506A18T**
		24	(610)	120② or 240②	2500	17.4	(2.7)	7.4	(3.3)	Assy. Stock②	**VP506A24T②**
		30	(760)	240	3400	18.9	(2.9)	9.0	(4.1)	Standard	**VP506A30T**
		36	(915)	240	4000	18.5	(2.9)	10.6	(4.8)	Standard	**VP506A36T**
8	(205)	12	(305)	120	1800	18.8	(2.9)	4.7	(2.4)	Stock	**VP508A12T**
		18	(460)	240	3000	20.8	(3.2)	7.4	(3.3)	Stock	**VP508A18U**
		24	(610)	240	3600	18.8	(2.9)	9.5	(4.3)	Stock	**VP508A24T**
		30	(760)	240	5000	20.8	(3.2)	11.7	(5.3)	Stock	**VP508A30T**
		36	(915)	240	6000	20.8	(3.2)	13.9	(6.3)	Standard	**VP508A36T**

CONTINUED

All units in this table are suitable for use up to 1800°F (982°C) maximum surface temperature.

② Stocked ceramic fiber heaters can be used to make this RAYMAX 2030 heater panel. These are **assembly stock** units. For those units rated at 120V~(ac) (code numbers ending in ...T), an alternate 240V~(ac) unit (code numbers ending in ...U) is available as a standard design. Flat heaters on **page 158** can be used in these RAYMAX cases.

Radiant Heaters

F.O.B: Columbia, Missouri

RAYMAX 2030

Nominal Heated Width in	(mm)	Nominal Heated Length in	(mm)	Volts	Watts	Watt Density W/in²	(W/cm²)	Approx Net Wt. lbs	(kg)	Availability	Code No.
10	(255)	12	(305)	120	2000	16.7	(2.6)	6.3	(2.9)	Standard	**VP510A12T**
		18	(460)	240	3600	20.0	(3.1)	9.0	(4.1)	Standard	**VP510A18T**
		24	(610)	240②	4500	17.9	(2.8)	11.7	(5.3)	Assy. Stock②	**VP510A24T②**
		30	(760)	240	6000	20.0	(3.1)	14.4	(6.5)	Standard	**VP510A30T**
		36	(915)	240	7000	19.4	(3.0)	17.1	(7.8)	Standard	**VP510A36T**
12	(305)	12	(305)	120② or 240②	2500	17.4	(2.7)	7.4	(3.3)	Assy. Stock②	**VP512A12T②**
		18	(460)	240	4000	18.5	(2.9)	10.6	(4.8)	Standard	**VP512A18T**
		24	(610)	240②	6000	20.8	(3.2)	13.9	(6.3)	Assy. Stock②	**VP512A24T②**
		30	(760)	240	7200	20.0	(3.1)	17.1	(7.8)	Standard	**VP512A30T**
		36	(915)	240	8400	19.4	(3.0)	20.3	(9.2)	Standard	**VP512A36T**
14	(355)	12	(305)	240	3500	20.8	(3.2)	8.5	(3.8)	Stock	**VP514A12T**
		18	(460)	240	4900	19.4	(3.0)	12.2	(5.5)	Standard	**VP514A18T**
		24	(610)	240	7000	20.8	(3.2)	16.0	(7.3)	Standard	**VP514A24T**
		30	(760)	240	8400	20.0	(3.1)	19.8	(9.0)	Standard	**VP514A30T**
		36	(915)	240/240③	9800	19.4	(3.0)	23.6	(10.7)	Standard	**VP514A36T**
16	(405)	12	(305)	240	3600	18.8	(2.9)	9.5	(4.3)	Standard	**VP516A12T**
		18	(460)	240	5700	19.8	(3.1)	13.9	(6.3)	Standard	**VP516A18T**
		24	(610)	240	7100	18.5	(2.9)	18.2	(8.2)	Standard	**VP516A24T**
		30	(760)	240/240③	9600	20.0	(3.1)	22.5	(10.2)	Standard	**VP516A30T**
		36	(915)	240/240③	11500	20.0	(3.1)	26.8	(12.2)	Standard	**VP516A36T**

All units in this table are suitable for use up to 1800°F (982°C) maximum surface temperature.

② Stocked ceramic fiber heaters can be used to make this RAYMAX 2030 heater panel. These are **assembly stock** units. For those units rated at 120V~(ac) (code numbers ending in ...T), an alternate 240V~(ac) (code numbers ending in ...U) unit is available as a standard design.

③ Dual element unit. Four power terminals provided.

How to Order

To order a **stock, assembly stock,** or **standard** heater, specify:

- RAYMAX 1220 or 2030
- Quantity
- Watlow code number
- Mounting studs, if desired

Note: One-inch mounting legs are provided. Three-inch legs are available from stock upon request.

If stock or standard units do not meet application needs, Watlow can manufacture radiant heaters to fit special requirements.

For **made-to-order** units, please specify, in addition to previous information:

- Heated width and length, and overall size
- Total wattage
- Voltage, and phases or zones required
- Load temperature expectations
- Mounting studs, if desired
- Mounting legs and leg height, if desired (one inch is provided unless otherwise specified)
- Location of terminals
- Terminal box, if desired
- Thermowell (specify size and location if standard end clamp is not sufficient)

Availability

Stock: Shipment in one to two days

Assembly Stock: Shipment in two weeks

Standard: Shipment in three to four weeks

Made-to-Order: Consult Watlow

Radiant Heaters

RAYMAX® 1330

The RAYMAX® 1330 is the only radiant heater that features specially insulated heater emitter strips for higher performance. Watlow developed a unique compacted mineral insulation to electrically insulate the element wire, with a result of superior heat transfer and higher operating capabilities.

Because of its rugged stainless steel construction, the RAYMAX 1330 will last longer. And this heater features a high emissivity black coating and a uniform, full surface heat source for better efficiency.

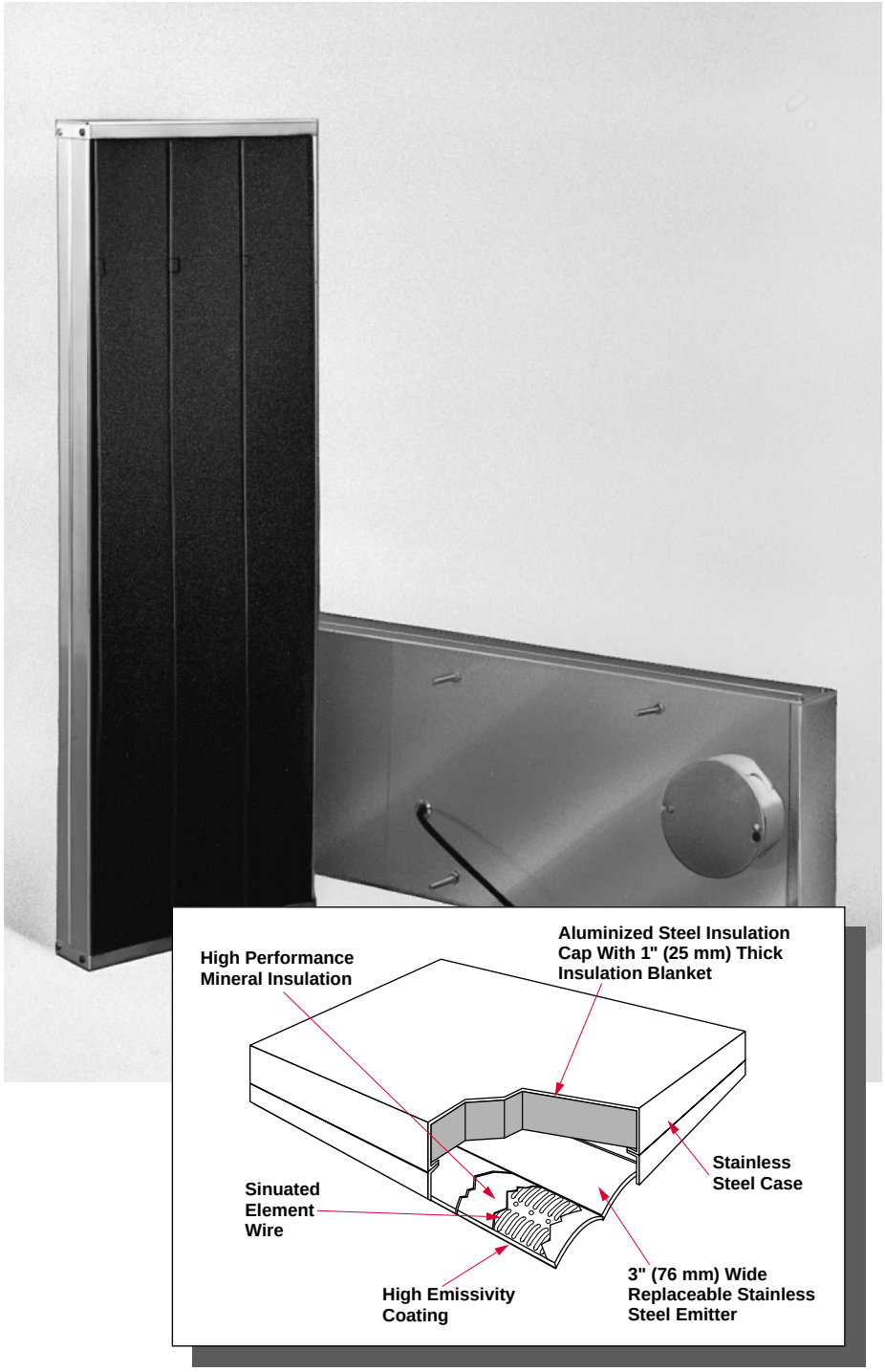

Performance Capabilities

- Maximum face temperature: 1300°F (700°C)
- Maximum watt density: 30 W/in^2 (4.7 W/cm^2)
- Typical peak energy wavelength: 3-3.6 microns

Features and Benefits

- **Field replaceable emitter strips** allow you to avoid the cost of buying a whole new radiant heater later on.
- **Rugged metal construction** protects heater from contaminants.
- **Accurate, responsive** face temperature sensing options are available.
- **No reflectors** to be cleaned or replaced.
- **No fragile glass** or ceramic elements to worry about.
- **Backside insulation** is one inch (25 mm) thick, resulting in better heating efficiency.

Applications

- Thermoforming plastics and composites
- Circuit board soldering
- Heat shrinking of plastic
- Terminal box
- Thermowell
- Thermocouple welded to hot face
- Mounting studs

Radiant Heaters

RAYMAX 1330

Applications and Technical Data

Sizes and Ratings

Thickness: 2.562 inches (65 mm)

Volts: 120, 240, 480V~(ac), 1-phase. 3-phase available on units with thee or six emitters.

Maximum Watt Density: 30 W/in^2 (4.7 W/cm^2)

Maximum Face Temperature: 1300°F (700°C)

Typical Peak Energy Wavelength: 3 microns

Heater Dimensions	Minimum	Maximum	Increments
Heated width:	3.187 in (81 mm)	19.125 in (485.77 mm)	3.187 in (81 mm)
Length:	12 in (305 mm)	30.5 in (775 mm)	any

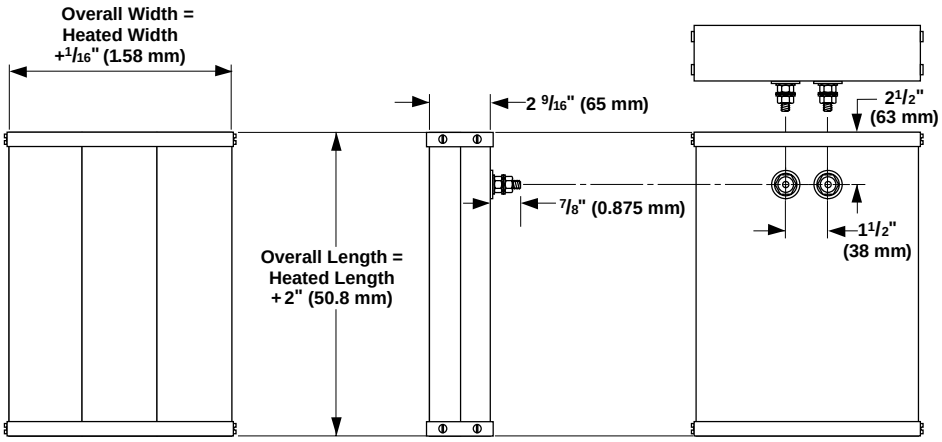

F.O.B.: St. Louis, Missouri

How to Order

The RAYMAX 1330 and radiant band/strip emitters are available **made-to-order** only. It is helpful to have the following information available:

- Heated width and length (or diameter for band emitters)
- Total wattage
- Voltage and phase
- Mounting studs, if desired
- Mounting legs and leg height, if desired
- Terminal location
- Terminal box, if desired
- Thermocouple or thermowell, if desired

Availability

Made-to-Order: Consult Watlow

Radiant Heaters

RAYMAX® 1525

Watlow's RAYMAX® 1525 is a rugged radiant heater with a unique design that allows quick removal and replacement of the element and reflectors. Instead of dismantling the heater, the parts are simply removed from the front. Replacing dirty reflectors often can improve heating efficiency by up to 30 percent.

The RAYMAX 1525 is available with either a fast responding quartz element or an Incoloy®-sheathed WATROD tubular element. Both are supported by stainless steel hardware in an extruded aluminum housing.

All stock units come with 1⅝ inch long, ⅜ inch-16 thread mounting bolts that slide along the heater's length to accommodate mounting considerations.

Performance Capabilities

- Element temperatures to 1600°F (870°C)
- Watt densities measured across the reflector area up to 25 W/in^2 (3.9 W/cm^2)

Features and Benefits

- **Fast and easy replacement** of the tubular element and reflectors for quick servicing.
- **Variety of element styles:** single or dual element, hairpin, liquid tight housing and quartz element.
- **Assembly stock availability** provides quick three-day shipment from order receipt.
- **Optional single end wiring**, available on most units, simplifies installation.
- **Polished aluminum reflector** efficiently directs heat to the work.

Applications

- Drying bulk materials
- Freeze protection
- Space heating
- Process heating
- Warming equipment

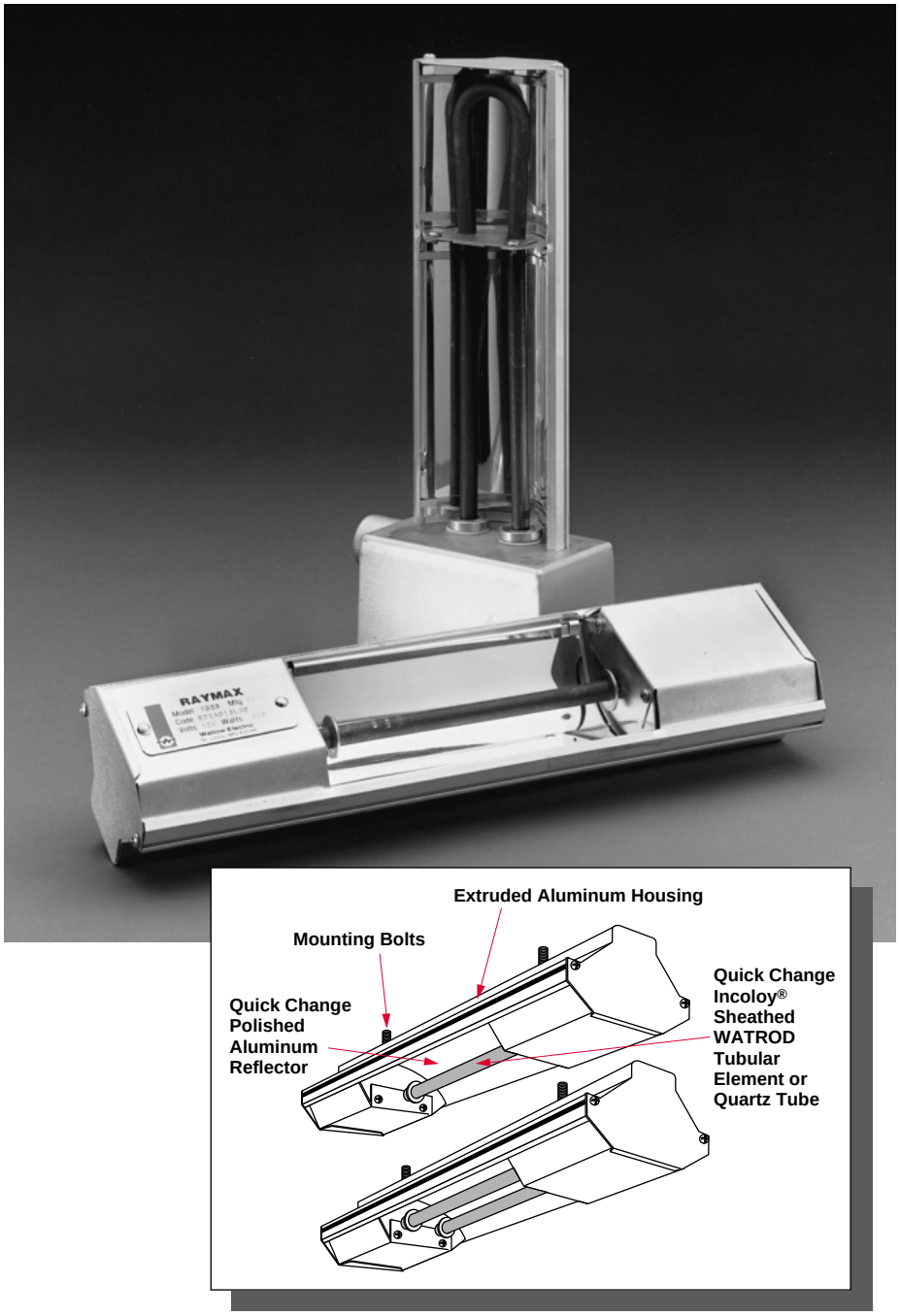

Options

Single End Wiring

Single end wiring permits power leads to be brought into only one end of the unit. Standard units with straight elements must be wired at both ends.

Power Leads

Appropriate power leads come attached to the heating element(s). To order, simply specify **length** and **flexible conduit**, if required.

Protective Grille

A stainless steel grille section that snaps in to reduce the possibility of personnel or product coming in contact with the heating elements.

Incoloy® is a registered trademark of Special Metals Incorporated.

Radiant Heaters

RAYMAX 1525

Options

Continued

Element Styles

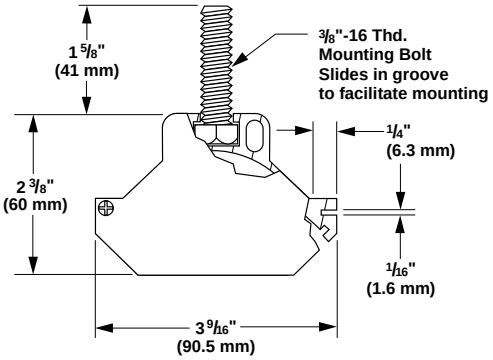

Protective Grille

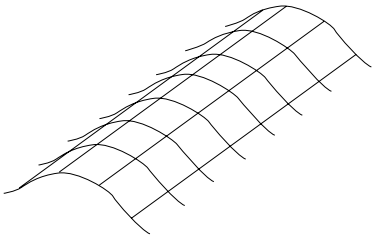

Single and Dual Elements

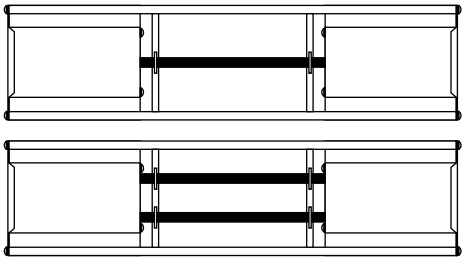

Straight length WATROD tubular elements come in single or dual styles. The dual style produces twice the wattage of the same length single element. Dual elements can also be jumpered to permit single end wiring and operating at twice the rated voltage up to 480V~(ac).

Hairpin Element

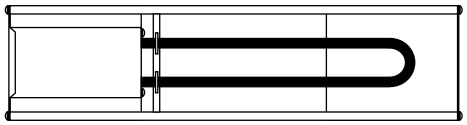

A WATROD hairpin-shaped tubular element provides the convenience of single end wiring and a reduced no-heat area on the non-terminal end.

Liquid Tight Housing

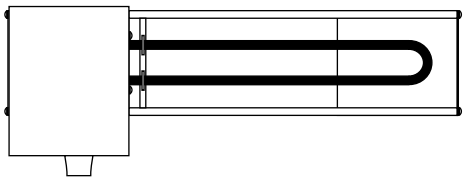

On this style, the hairpin element terminates in a liquid tight housing to permit operation in a hose-down area or exposure to weather. The cast aluminum housing has a ½ inch NPT conduit fitting. The box is 2 13/16 inches x 3⅜ inches x 5¼ inches including conduit hub.

Quartz Tube Element

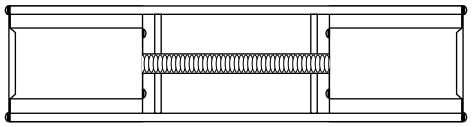

Watlow quartz elements provide the advantage of faster heat-up and cool-down—important when encountering frequent line stoppages. A standard ½ inch (13 mm) diameter quartz tube provides strength and long resistance wire life.

F.O.B.: St. Louis, Missouri

How to Order

To order, specify:

- Watlow code number
- Watts/volts
- Options
- Quantity

If our stock units do not meet your application needs, Watlow can manufacture to meet your special requirements. For **made-to-order** units, please specify:

- Overall or heated length
- Element style
- Volts/watts
- Options
- Quantity

Availability

Assembly Stock: Three working days

Made-to-Order: Consult Watlow

Radiant Heaters

F.O.B.: St. Louis, Missouri

RAYMAX 1525

Single Element

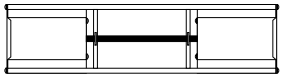

Overall Length in	(mm)	Heated Length in	(mm)	Volts	kW	Approx Net Wt. lbs	(kg)	Availability	Code No.	Replacement Element Code No.	Replacement Reflector Code No.
13 5/8	(345)	7 1/4	(185)	120	0.40	1.9	(0.88)	Assy. Stock	**RT1A013L00**	**RDN10E1**	**RR1013L00**
20 5/8	(510)	13 5/8	(345)	120	0.65	2.7	(1.3)	Assy. Stock	**RT1A020A00**	**RDN16L1**	**RR1020A00**
24 3/8	(620)	16 13/16	(425)	120	0.80	3.2	(1.5)	Assy. Stock	**RT1A024G00**	**RDN21B1**	**RR1024G00**
24 3/8	(620)	16 13/16	(425)	240	0.80	3.2	(1.5)	Assy. Stock	**RT1G024G00**	**RDN21B10**	**RR1024G00**
30 5/8	(780)	22 7/8	(580)	120	1.10	4.0	(1.8)	Assy. Stock	**RT1A030L00**	**RDN27C1**	**RR1030L00**
30 5/8	(780)	22 7/8	(580)	240	1.10	4.0	(1.8)	Assy. Stock	**RT1G030L00**	**RDN27C10**	**RR1030L00**
35 7/8	(910)	27 7/8	(710)	240	1.30	4.7	(2.2)	Assy. Stock	**RT1G035R00**	**RDN32C10**	**RR1035R00**
35 7/8	(910)	27 7/8	(710)	480	1.30	4.7	(2.2)	Assy. Stock	**RT1P035R00**	**RDN32C11**	**RR1035R00**
46 5/8	(1185)	38 5/8	(980)	240	1.80	5.8	(2.7)	Assy. Stock	**RT1G046L00**	**RDN42R10**	**RR1046L00**
46 5/8	(1185)	38 5/8	(980)	480	1.80	5.8	(2.7)	Assy. Stock	**RT1P046L00**	**RDN42R11**	**RR1046L00**
61 3/8	(1560)	53 1/4	(1350)	240	2.50	7.5	(3.4)	Assy. Stock	**RT1G061G00**	**RDN57J10**	**RR1061G00**
61 3/8	(1560)	53 1/4	(1350)	480	2.50	7.5	(3.4)	Assy. Stock	**RT1P061G00**	**RDN57J11**	**RR1061G00**
73 3/4	(1875)	65 5/8	(1650)	240	3.00	9.0	(4.1)	Assy. Stock	**RT1G073N00**	**RDN69E10**	**RR1073N00**
73 3/4	(1875)	65 5/8	(1650)	480	3.00	9.0	(4.1)	Assy. Stock	**RT1P073N00**	**RDN69E11**	**RR1073N00**
85 3/4	(2180)	77 5/8	(1955)	240	3.60	10.2	(4.7)	Assy. Stock	**RT1G085N00**	**RDN81E10**	**RR1085N00**
85 3/4	(2180)	77 5/8	(1955)	480	3.60	10.2	(4.7)	Assy. Stock	**RT1P085N00**	**RDN81E11**	**RR1085N00**

Dual Element

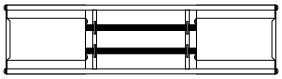

13 5/8	(345)	7 1/4	(185)	120	0.80	2.2	(1.0)	Assy. Stock	**RT2A013L00**	**RDN10E1**	**RR2013L00**
20 5/8	(510)	13 5/8	(345)	120	1.30	2.9	(1.3)	Assy. Stock	**RT2A020A00**	**RDN16L1**	**RR2020A00**
24 3/8	(620)	16 13/16	(425)	120	1.60	3.4	(1.5)	Assy. Stock	**RT2A024G00**	**RDN21B1**	**RR2024G00**
24 3/8	(620)	16 13/16	(425)	240	1.60	3.4	(1.5)	Assy. Stock	**RT2G024G00**	**RDN21B10**	**RR2024G00**
30 5/8	(780)	22 7/8	(580)	120	2.20	4.1	(1.9)	Assy. Stock	**RT2A030L00**	**RDN27C1**	**RR2030L00**
30 5/8	(780)	22 7/8	(580)	240	2.20	4.1	(1.9)	Assy. Stock	**RT2G030L00**	**RDN27C10**	**RR2030L00**
35 7/8	(910)	27 7/8	(710)	240	2.60	4.7	(2.1)	Assy. Stock	**RT2G035R00**	**RDN32C10**	**RR2035R00**
35 7/8	(910)	27 7/8	(710)	480	2.60	4.7	(2.1)	Assy. Stock	**RT2P035R00**	**RDN32C11**	**RR2035R00**
46 5/8	(1185)	38 5/8	(980)	240	3.60	6.0	(2.7)	Assy. Stock	**RT2G046L00**	**RDN42R10**	**RR2046L00**
46 5/8	(1185)	38 5/8	(980)	480	3.60	6.0	(2.7)	Assy. Stock	**RT2P046L00**	**RDN42R11**	**RR2046L00**
61 3/8	(1560)	53 1/4	(1350)	240	5.00	7.7	(3.5)	Assy. Stock	**RT2G061G00**	**RDN57J10**	**RR2061G00**
61 3/8	(1560)	53 1/4	(1350)	480	5.00	7.7	(3.5)	Assy. Stock	**RT2P061G00**	**RDN57J11**	**RR2061G00**
73 3/4	(1875)	65 5/8	(1650)	240	6.00	9.1	(4.1)	Assy. Stock	**RT2G073N00**	**RDN69E10**	**RR2073N00**
73 3/4	(1875)	65 5/8	(1650)	480	6.00	9.1	(4.1)	Assy. Stock	**RT2P073N00**	**RDN69E11**	**RR2073N00**
85 3/4	(2180)	77 5/8	(1955)	240	7.20	10.5	(4.8)	Assy. Stock	**RT2G085N00**	**RDN81E10**	**RR2085N00**
85 3/4	(2180)	77 5/8	(1955)	480	7.20	10.5	(4.8)	Assy. Stock	**RT2P085N00**	**RDN81E11**	**RR2085N00**

Hairpin Element

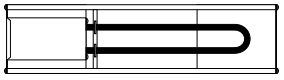

12 3/4	(325)	8 3/8	(210)	120	0.80	2.1	(0.95)	Assy. Stock	**RU1A012N00**	**RDN21B1UAAB**	**RR3012N00**
12 3/4	(325)	8 3/8	(210)	240	0.80	2.1	(0.95)	Assy. Stock	**RU1G012N00**	**RDN21B10UAAA**	**RR3012N00**
15 7/8	(405)	11 7/16	(290)	120	1.10	2.4	(1.1)	Assy. Stock	**RU1A015R00**	**RDN27C1UAAA**	**RR3015R00**
15 7/8	(405)	11 7/16	(290)	240	1.10	2.4	(1.1)	Assy. Stock	**RU1G015R00**	**RDN27C10UAAC**	**RR3015R00**
23 3/4	(605)	19 3/16	(490)	240	1.80	3.3	(1.5)	Assy. Stock	**RU1G023N00**	**RDN42R10UAAC**	**RR3023N00**
23 3/4	(605)	19 3/16	(490)	480	1.80	3.3	(1.5)	Assy. Stock	**RU1P023N00**	**RDN42R11UAAB**	**RR3023N00**
31 1/4	(795)	26 9/16	(675)	240	2.50	4.2	(1.9)	Assy. Stock	**RU1G031E00**	**RDN57J10UAAJ**	**RR3031E00**
31 1/4	(795)	26 9/16	(675)	480	2.50	4.2	(1.9)	Assy. Stock	**RU1P031E00**	**RDN57J11UAAB**	**RR3031E00**
37 1/4	(945)	32 7/16	(825)	240	3.00	4.9	(2.2)	Assy. Stock	**RU1G037E00**	**RDN69E10UAAB**	**RR3037E00**
37 1/4	(945)	32 7/16	(825)	480	3.00	4.9	(2.2)	Assy. Stock	**RU1P037E00**	**RDN69E11UAAB**	**RR3037E00**
43 3/8	(1150)	38 7/16	(975)	240	3.60	5.6	(2.5)	Assy. Stock	**RU1G043G00**	**RDN81E10UAAB**	**RR3043G00**
43 3/8	(1150)	38 7/16	(975)	480	3.60	5.6	(2.5)	Assy. Stock	**RU1P043G00**	**RDN81E11UAAB**	**RR3043G00**

Radiant Heaters

F.O.B.: St. Louis, Missouri

RAYMAX 1525

Hairpin Element with Liquid Tight Housing

Overall Length in	(mm)	Heated Length in	(mm)	Volts	kW	Approx Net Wt. lbs	(kg)	Availability	Code No.	Replacement Element Code No.	Replacement Reflector Code No.
12 ¾	(325)	8 ⅜	(210)	120	0.80	2.5	(1.1)	Assy. Stock	**RS1A012N00**	**RDN21B1BAAB**	**RR4012N00**
12 ¾	(325)	8 ⅜	(210)	240	0.80	2.5	(1.1)	Assy. Stock	**RS1G012N00**	**RDN21B10BAAA**	**RR4012N00**
15 ⅞	(405)	11 7/16	(290)	120	1.10	2.9	(1.3)	Assy. Stock	**RS1A015R00**	**RDN27C1BAAB**	**RR4015R00**
15 ⅞	(405)	11 7/16	(290)	240	1.10	2.9	(1.3)	Assy. Stock	**RS1G015R00**	**RDN27C10BAAA**	**RR4015R00**
23 ¾	(605)	19 3/16	(490)	240	1.80	3.8	(1.7)	Assy. Stock	**RS1G023N00**	**RDN42R10BAAD**	**RR4023N00**
23 ¾	(605)	19 3/16	(490)	480	1.80	3.8	(1.7)	Assy. Stock	**RS1P023N00**	**RDN42R11BAAD**	**RR4023N00**
31 ¼	(795)	26 9/16	(675)	240	2.50	4.8	(2.2)	Assy. Stock	**RS1G031E00**	**RDN57J10BAAB**	**RR4031E00**
31 ¼	(795)	26 9/16	(675)	480	2.50	4.8	(2.2)	Assy. Stock	**RS1P031E00**	**RDN57J11BAAA**	**RR4031E00**
37 ¼	(945)	32 7/16	(825)	240	3.00	5.5	(2.5)	Assy. Stock	**RS1G037E00**	**RDN69E10BAAD**	**RR4037E00**
37 ¼	(945)	32 7/16	(825)	480	3.00	5.5	(2.5)	Assy. Stock	**RS1P037E00**	**RDN69E11BAAD**	**RR4037E00**
43 ⅜	(1150)	38 7/16	(975)	240	3.60	6.2	(2.8)	Assy. Stock	**RS1G043G00**	**RDN81E10BAAB**	**RR4043G00**
43 ⅜	(1150)	38 7/16	(975)	480	3.60	6.2	(2.8)	Assy. Stock	**RS1P043G00**	**RDN81E11BAAA**	**RR4043G00**

Note: Quartz tube elements must be operated in a horizontal position.

Quartz Tube Element

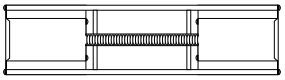

18 1/16	(460)	10	(255)	120	0.50	2.4	(1.1)	Assy. Stock	**RG1A018B00**	**RQB12FA05001B**	**RR5018B00**
26 1/16	(660)	18	(455)	120	0.90	3.2	(1.4)	Assy. Stock	**RG1A026B00**	**RQB20EA09001B**	**RR5026B00**
26 1/16	(660)	18	(455)	240	0.90	3.2	(1.4)	Assy. Stock	**RG1G026B00**	**RQB20EG09001B**	**RR5026B00**
33 1/16	(840)	25	(635)	120	1.25	3.9	(1.7)	Assy. Stock	**RG1A033B00**	**RQB27GA12001B**	**RR5033B00**
33 1/16	(840)	25	(635)	240	1.25	3.9	(1.7)	Assy. Stock	**RG1G033B00**	**RQB27GG12001B**	**RR5033B00**
45 ⅞	(1165)	38	(965)	240	1.90	5.1	(2.3)	Assy. Stock	**RG1G045S00**	**RQB40DG19001B**	**RR5045S00**
45 ⅞	(1165)	38	(965)	480	1.90	5.1	(2.3)	Assy. Stock	**RG1P045S00**	**RQB40DP19001B**	**RR5045S00**
60 ⅞	(1550)	53	(1345)	240	2.65	6.6	(3.0)	Assy. Stock	**RG1G060S00**	**RQB55HG26001B**	**RR5060S00**
60 ⅞	(1550)	53	(1345)	480	2.65	6.6	(3.0)	Assy. Stock	**RG1P060S00**	**RQB55HP26001B**	**RR5060S00**

F.O.B.: Hannibal, Missouri

Tubular Replacement Elements for Reflector Style Radiant Heaters

The following tubular radiant heating elements are available for replacing popular non-Watlow radiant elements.

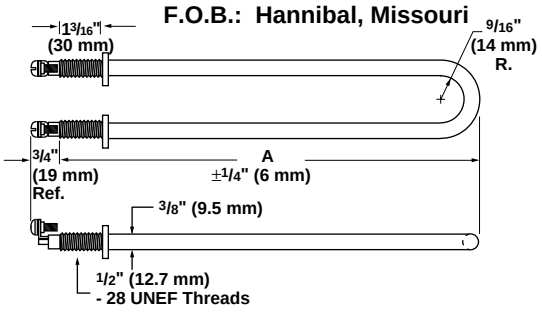

Hairpin (U-Shaped) Element With Liquid Tight Bulkheads Stock Chart

Hairpin A Dimension in	(mm)	Volts	Watts	Approx. Net Wt. oz	(g)	Availability	Chromalox® PCN	Chromalox® Catalog No.	Watlow Code No.
10 5/16	(266)	120	800	6	(170)	Assy. Stock	106673	UTU-2LT	**RDN21B1B**
10 5/16	(266)	240	800	6	(170)	Assy. Stock	106681	UTU-2LT	**RDN21B10B**
13 5/16	(344)	120	1100	8	(225)	Assy. Stock	106690	UTU-3LT	**RDN27C1B**
13 5/16	(344)	240	1100	8	(225)	Assy. Stock	106702	UTU-3LT	**RDN27C10B**
21 3/16	(541)	240	1800	13	(370)	Assy. Stock	106710	UTU-4LT	**RDN42R10B**
21 3/16	(541)	480	1800	13	(370)	Assy. Stock	106729	UTU-4LT	**RDN42R11B**
28 ½	(728)	240	2500	16	(455)	Assy. Stock	106737	UTU-5LT	**RDN57J10B**
28 ½	(728)	480	2500	16	(455)	Assy. Stock	106745	UTU-5LT	**RDN57J11B**
34 ⅜	(878)	240	3000	19	(540)	Assy. Stock	106753	UTU-6LT	**RDN69E10B**
34 ⅜	(878)	480	3000	19	(540)	Assy. Stock	106761	UTU-6LT	**RDN69E11B**
40 ⅜	(1030)	240	3600	22	(625)	Assy. Stock	106770	UTU-7LT	**RDN81E10B**
40 ⅜	(1030)	480	3600	22	(625)	Assy. Stock	106788	UTU-7LT	**RDN81E11B**

Radiant Heaters

F.O.B.: Hannibal, Missouri

RAYMAX 1525

Tubular Replacement Elements for Reflector Style Radiant Heaters

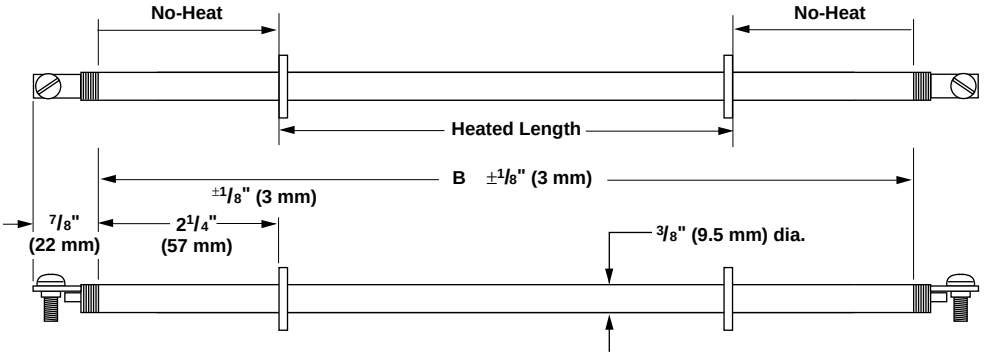

Straight Element Stock Chart

Sheath B Dimension inch	(mm)	Heated Length inch	(mm)	No-Heat Length inch	(mm)	Volts	Watts	Approx. Net wt. oz.	(g)	Availability	Chromalox PCN	Chromalox Catalog No.	Watlow Code No.
10 1/4	(260)	7 1/4	(184)	1 1/2	(38)	120	400	3	(85)	Assy. Stock	147766	RTU-2063AX35	**RDN10E1**
16 5/8	(422)	13 5/8	(346)	1 1/2	(38)	120	650	5	(140)	Assy. Stock	147774	RTU-2063AX29	**RDN16L1**
21 1/16	(535)	16 13/16	(409)	2 1/8	(54)	120	800	6	(170)	Assy. Stock	106112	RTU-2083A	**RDN21B1**
21 1/16	(535)	16 13/16	(409)	2 1/8	(54)	208	800	6	(170)	Standard	106120	RTU-2083AV	**RDN21B2**
21 1/16	(535)	16 13/16	(409)	2 1/8	(54)	240	800	6	(170)	Assy. Stock	106139	RTU-2083A	**RDN21B10**
21 1/16	(535)	16 13/16	(409)	2 1/8	(54)	277	800	6	(170)	Standard	106147	RTU-2083AV	**RDN21B4**
27 1/8	(688)	22 7/8	(580)	2 1/8	(54)	120	1100	8	(225)	Assy. Stock	106155	RTU-3113A	**RDN27C1**
27 1/8	(688)	22 7/8	(580)	2 1/8	(54)	208	1100	8	(225)	Standard	106163	RTU-3113AV	**RDN27C2**
27 1/8	(688)	22 7/8	(580)	2 1/8	(54)	240	1100	8	(225)	Assy. Stock	106171	RTU-3113A	**RDN27C10**
27 1/8	(688)	22 7/8	(580)	2 1/8	(54)	277	1100	8	(225)	Standard	106180	RTU-3113AV	**RDN27C4**
32 1/8	(816)	27 7/8	(580)	2 1/8	(54)	240	1300	9	(255)	Assy. Stock	108409	RTU-3133A	**RDN32C10**
32 1/8	(816)	27 7/8	(580)	2 1/8	(54)	480	1300	9	(255)	Assy. Stock	108396	RTU-3133A	**RDN32C11**
42 7/8	(1090)	38 5/8	(905)	2 1/8	(54)	208	1800	13	(370)	Standard	106198	RTU-4183AV	**RDN42R2**
42 7/8	(1090)	38 5/8	(905)	2 1/8	(54)	240	1800	13	(370)	Assy. Stock	106200	RTU-4183A	**RDN42R10**
42 7/8	(1090)	38 5/8	(905)	2 1/8	(54)	277	1800	13	(370)	Standard	106219	RTU-3133AV	**RDN42R4**
42 7/8	(1090)	38 5/8	(905)	2 1/8	(54)	480	1800	13	(370)	Assy. Stock	106227	RTU-3133A	**RDN42R11**
57 1/2	(1460)	53 1/4	(1350)	2 1/8	(54)	208	2500	16	(455)	Standard	106235	RTU-5253AV	**RDN57J2**
57 1/2	(1460)	53 1/4	(1350)	2 1/8	(54)	240	2500	16	(455)	Assy. Stock	106243	RTU-5253A	**RDN57J10**
57 1/2	(1460)	53 1/4	(1350)	2 1/8	(54)	277	2500	16	(455)	Standard	106251	RTU-5253AV	**RDN57J4**
57 1/2	(1460)	53 1/4	(1350)	2 1/8	(54)	480	2500	16	(455)	Assy. Stock	106260	RTU-5253A	**RDN57J11**
69 1/4	(1760)	65	(1650)	2 1/8	(54)	208	3000	19	(540)	Standard	106278	RTU-6303AV	**RDN69E2**
69 1/4	(1760)	65	(1650)	2 1/8	(54)	240	3000	19	(540)	Assy. Stock	106286	RTU-6303A	**RDN69E10**
69 1/4	(1760)	65	(1650)	2 1/8	(54)	277	3000	19	(540)	Standard	106294	RTU-6303AV	**RDN69E4**
69 1/4	(1760)	65	(1650)	2 1/8	(54)	480	3000	19	(540)	Assy. Stock	106307	RTU-6303A	**RDN69E11**
81 1/4	(2065)	77	(1955)	2 1/8	(54)	208	3600	22	(625)	Standard	106315	RTU-7363AV	**RDN81E2**
81 1/4	(2065)	77	(1955)	2 1/8	(54)	240	3600	22	(625)	Assy. Stock	106323	RTU-7363A	**RDN81E10**
81 1/4	(2065)	77	(1955)	2 1/8	(54)	277	3600	22	(625)	Standard	106331	RTU-7363AV	**RDN81E4**
81 1/4	(2065)	77	(1955)	2 1/8	(54)	480	3600	22	(625)	Assy. Stock	106340	RTU-7363A	**RDN81E11**
109 1/4	(2775)①	105	(2665)	2 1/8	(54)	240	4000	32	(905)	Standard	106358	RTU-7303AX10	**RDN109E10**
134 1/2	(3415)①	127 3/4	(3245)	3 3/8	(85)	240	5000	37	(1050)	Standard	106366	RTU-7303AX13	**RDN134J10**
153 3/8	(3895)①	145 7/8	(3700)	4	(101)	240	5500	40	(1135)	Standard	106374	RTU-7303AX9A	**RDN153R10**
179 1/4	(4550)①	171 1/4	(4350)	4	(101)	240	6500	51	(1445)	Standard	106382	RTU-7363AX38	**RDN179E10**

Radiant Heaters

F.O.B.: Hannibal, Missouri

RAYMAX 1525

Tubular Replacement Elements for Reflector Style Radiant Heaters

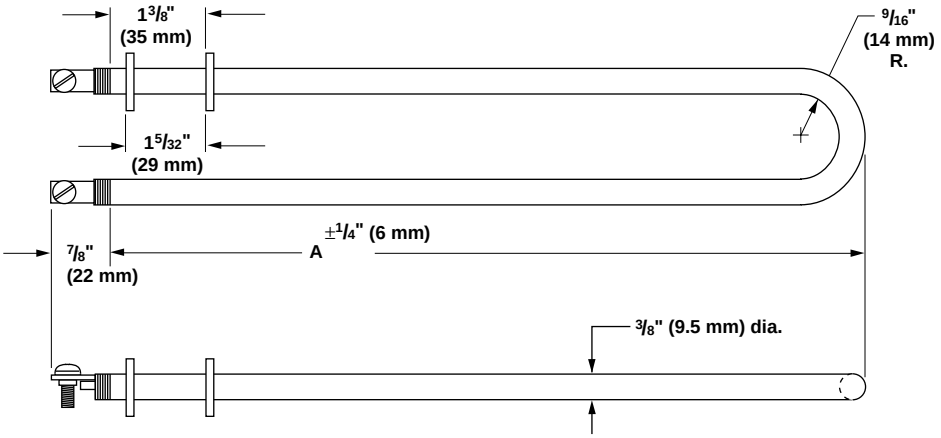

Hairpin (U-Shaped) Element Stock Chart

Hairpin A Dimension in	(mm)	Volts	Watts	Approx. Net Wt. oz	(g)	Availability	Chromalox® PCN	Chromalox® Catalog No.	Watlow Code No.
10 ½	(266)	120	800	6	(170)	Assy. Stock	106438	UTU-2	**RDN21B1U**
10 ½	(266)	240	800	6	(170)	Assy. Stock	106454	UTU-2	**RDN21B10U**
10 ½	(266)	277	800	6	(170)	Standard	106462	UTU-2V	**RDN21B4U**
13 9/16	(344)	120	1100	8	(225)	Assy. Stock	106470	UTU-3	**RDN27C1U**
13 9/16	(344)	240	1100	8	(225)	Assy. Stock	106497	UTU-3	**RDN27C10U**
13 9/16	(344)	277	1100	8	(225)	Standard	106500	UTU-3V	**RDN27C4U**
21 5/16	(541)	208	1800	13	(370)	Standard	106518	UTU-4V	**RDN42R2U**
21 5/16	(541)	240	1800	13	(370)	Assy. Stock	106526	UTU-4	**RDN42R10U**
21 5/16	(541)	480	1800	13	(370)	Assy. Stock	106542	UTU-4	**RDN42R11U**
28 11/16	(728)	208	2500	16	(455)	Standard	106550	UTU-5V	**RDN57J2U**
28 11/16	(728)	240	2500	16	(455)	Assy. Stock	106569	UTU-5	**RDN57J10U**
28 11/16	(728)	277	2500	16	(455)	Standard	106577	UTU-5V	**RDN57J4U**
28 11/16	(728)	480	2500	16	(455)	Assy. Stock	106585	UTU-5	**RDN57J11U**
34 9/16	(878)	240	3000	19	(540)	Assy. Stock	106606	UTU-6	**RDN69E10U**
34 9/16	(878)	480	3000	19	(540)	Assy. Stock	106622	UTU-6	**RDN69E11U**
40 9/16	(1030)	240	3600	22	(625)	Assy. Stock	106649	UTU-7	**RDN81E10U**
40 9/16	(1030)	277	3600	22	(625)	Standard	106657	UTU-7V	**RDN81E4U**
40 9/16	(1030)	480	3600	22	(625)	Assy. Stock	106665	UTU-7	**RDN81E11U**

Chromalox® is a registered trademark of Emerson Electric Co.

How to Order

For units listed in the stock charts, please specify:

- Watlow code number
- Volts/watts
- Style (straight length, hairpin or hairpin with bulkheads)
- Quantity

If our stock elements do not meet your needs, Watlow can provide a **made-to-order** unit.

Details on constructions, materials and options are contained in ***Tubular and Process Assemblies***—WATROD Heating Elements, **pages 273 to 295**. For **made-to-order** units, please specify:

- Volts/watts
- Sheath material and diameter
- Sheath length and no-heat length
- Terminations or terminal pin length
- Bend configuration, if applicable
- Mounting method
- Quantity

Availability

Assembly Stock: Three to five days

Standard: 10 working days

Modified Stock ①: Five to seven working days

Made-to-Order: Four to six weeks

① Assembly Stock with catalog options.

Radiant Heaters

RAYMAX® 1626

Watlow's RAYMAX® 1626 quartz tube panel is a fast responding and very efficient source of radiant thermal energy. With heat-up and cool down capabilities of 40 to 50 seconds, the quartz heater is ideal for use in operations where frequent line stoppages are anticipated or immediate heat-up and cool-down is necessary. Custom sizes are available up to 27 inches wide in three inch increments and 70 inches long.

Performance Capabilities

- Watt densities to 20 W/in^2 (3.1 W/cm^2) measured across the reflector area
- Element temperatures to 1700°F (930°C)

Features and Benefits

- **Quartz tubes and reflectors are easy to replace** from front of heater for less downtime.
- **Polished parabolic aluminum reflectors** direct radiant energy from the back for efficient heating.
- **Little residual heat** to reduce possibility of product damage during line stoppage.
- **Fast heat-up, cool down allows heater turn off during gaps in production** for more energy savings.

Applications

- Heating plastic films
- Ink drying
- Coating curing
- Fusing powder coating
- Activating adhesives

Options

Thermocouple clamp is located on the end cap. The clamp is used to hold a one eighth inch diameter thermocouple (not included) in front of the reflector to intercept the radiated energy to provide a control temperature. The thermocouple should be painted with a high temperature black paint to improve absorption.

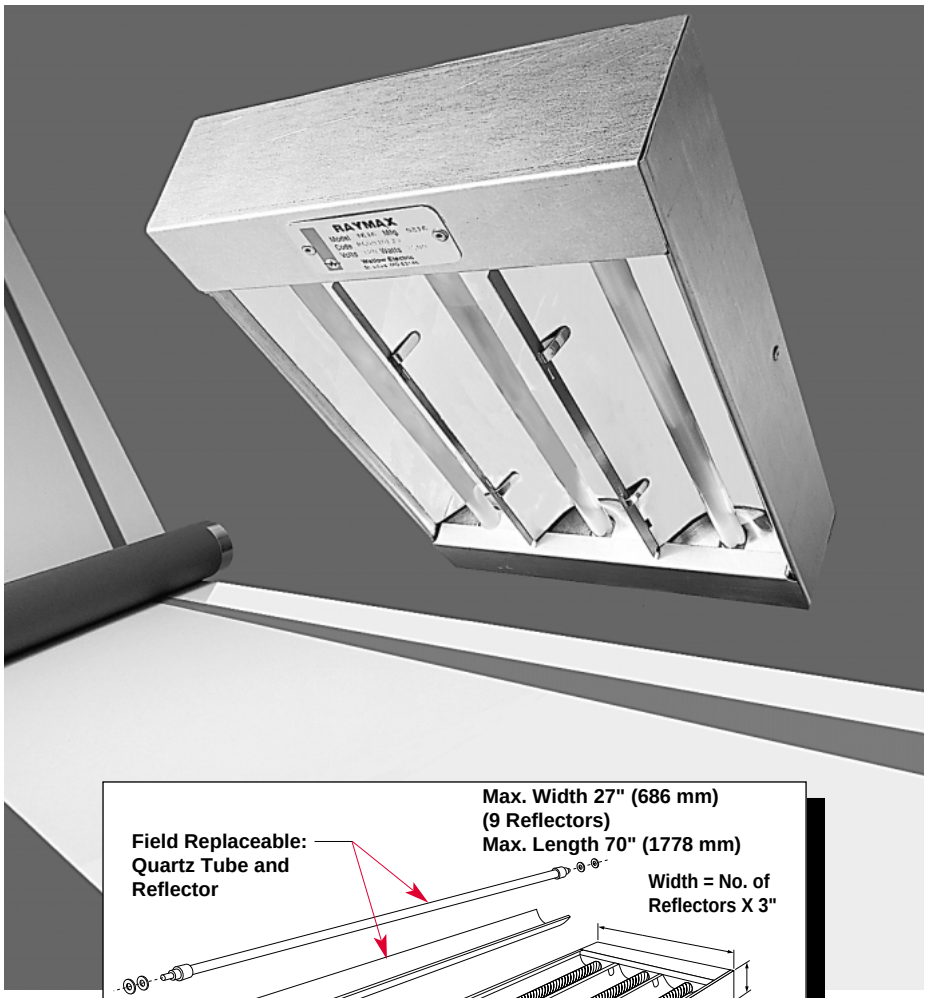

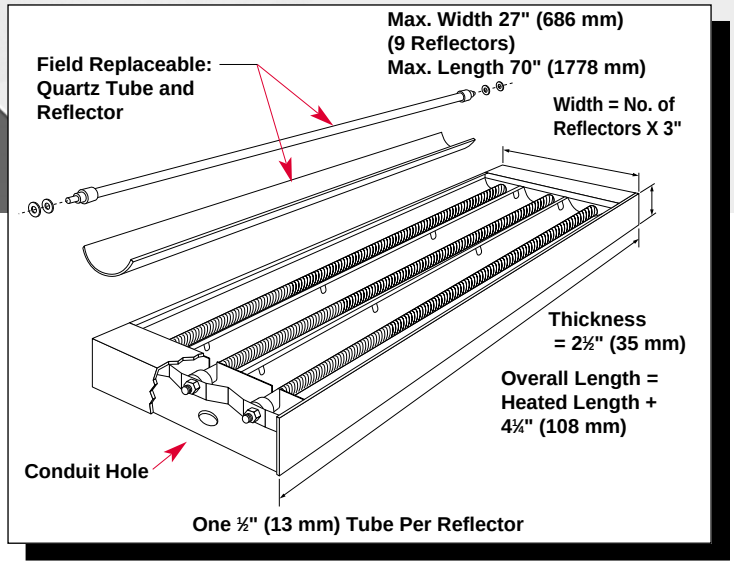

How to Order

The RAYMAX 1626 is **made-to-order** only. It is helpful to have the following information available:

- Heated width (3-inch increments) and length
- Total wattage
- Voltage and phase (balanced 3-phase on three, six and nine tube units only)
- Mounting studs, if desired

Availability

Made-to-Order: Consult Watlow

F.O.B.: St. Louis, Missouri

Radiant Heaters

Radiant Band and Strip Emitters

Constructed using Watlow's exclusive mineral insulation, rugged stainless steel sheath and high emissivity coating, these heaters can operate at temperatures to 1300°F (700°C), and 30 W/in^2 (4.7 W/cm^2).

Sizes

Strip Emitters

Width: 3 in (76.2 mm)

Length: 6 in (152.4 mm) min.
31 in (787.4 mm) max.

Band Emitters

Width: 1 in (25.4 mm),
2 in (50.8 mm),
3 in (76.2 mm) max.

- Segment Length: 6 in (152.4 mm) min. to 42 in (1066.8 mm) max.
- Partial arcs to full 360° coverage: Consult Watlow.
- High emissivity coating on inside standard. For high emissivity coating on outside: Consult Watlow.
- Post terminals standard; high temperature Type H leads available.

Options

- Mounting studs
- Mounting clips for 3 inch wide emitter strips, part #MM6063
- Thermocouple welded to sheath
- Thermocouple pocket welded to sheath
- Bayonet fitting for VAT style thermocouple

Applications

- Heating rotating drums and rollers
- Tube ovens
- Small spot heating
- Heat shrinking and curing wire coatings
- Heat laminating wheels

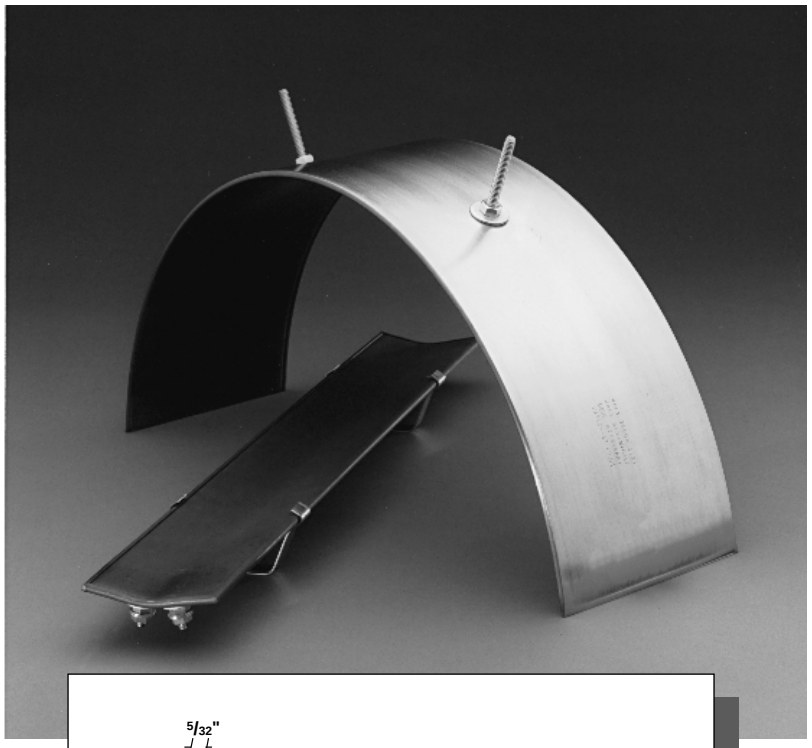

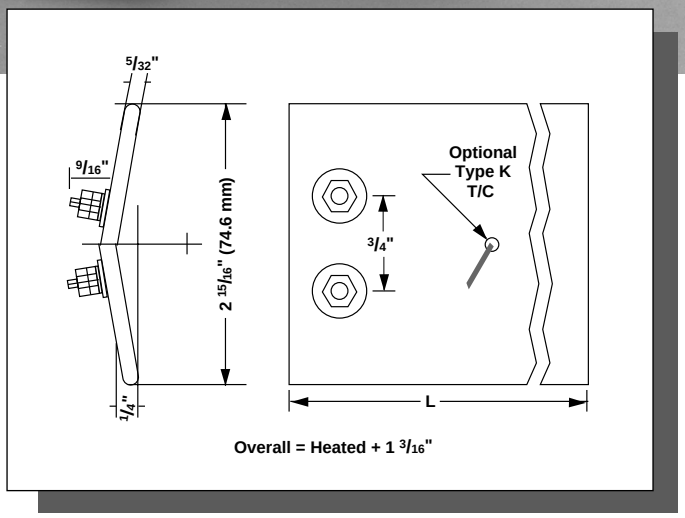

How to Order

The radiant band/strip emitters are available **made-to-order** only. It is helpful to have the following information available:

- Heated width and length (or diameter for band emitters)
- Total wattage
- Voltage, single phase only
- Mounting studs, if desired
- Thermocouple or thermowell or thermocouple pocket, if desired

Availability

Made-to-Order: Consult Watlow

Radiant Heaters

Quartz

The Watlow quartz tube radiant heater provides medium wave infrared energy and fast heat up and cool down. With element temperatures around 1700°F (930°C) the heater produces infrared radiation with a peak energy wavelength of 2.5 microns. Lower operating temperatures produce longer wave lengths. The majority of the energy is transmitted through the translucent quartz tube without being absorbed.

Most designs reach full output in 30 to 60 seconds and typically cool down to 50 percent output in under 15 seconds. The quartz tube heater is ideal for applications where frequent line stoppages are anticipated or quick heat up or cool down is necessary. Heaters can be turned off between production runs to save energy. Unique control schemes are possible that adjust the wattage output of the heaters during the heating cycle.

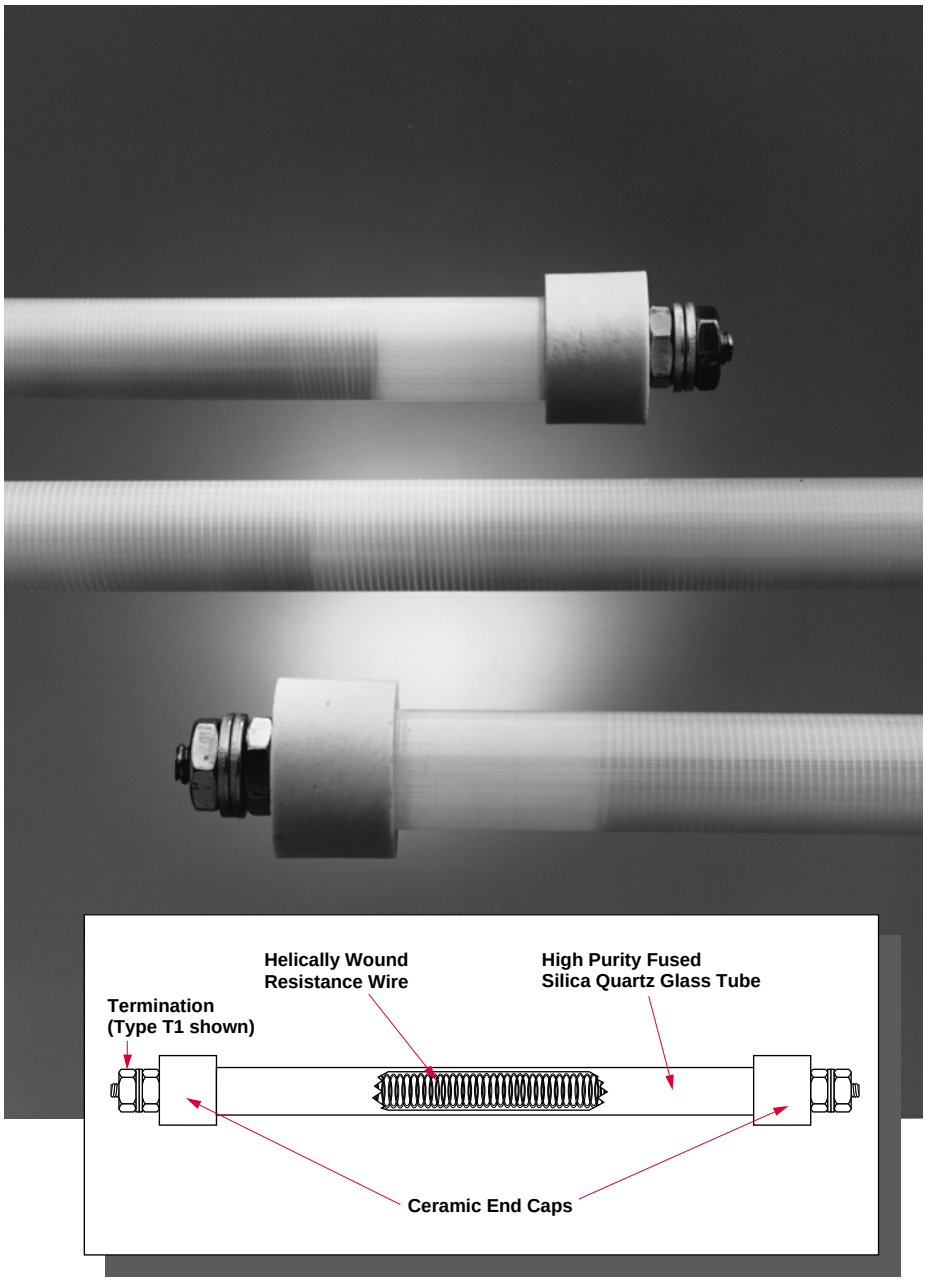

Performance Capabilities

- Element temperatures up to 1700°F (930°C)
- Tube watt densities up to 60 W/in of heated length (23.6 W/cm of heated length)

Features and Benefits

- **Fast delivery** on all standard replacement elements means less downtime waiting for parts.
- **Termination styles** are available for virtually every enclosure on the market.
- **Ceramic end caps**, bonded to the quartz tubing ends, provide a rigid support for terminations. RTV bonding also available.
- **Heaters usually do not need to be retracted** during line stoppages.
- **No objectionable glare** is created due to low emission in the visible spectrum.
- **No process contamination** occurs with this clean thermal energy source.

Applications

- Shrink packaging
- Laminating
- Thermoforming
- Fusing processes
- Vulcanizing and curing rubber
- Sterilizing
- Sealing
- Electrostatic copy equipment
- Drying processes: photos, textiles, coatings and sand core castings

Radiant Heaters

Quartz

Applications and Technical Data

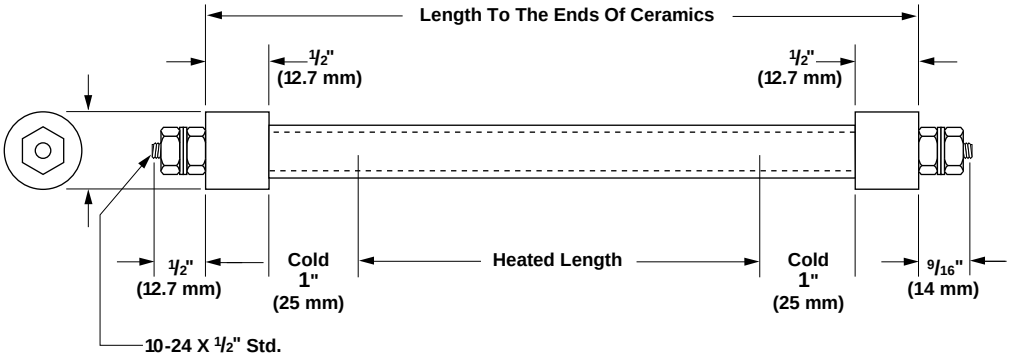

Specifications

Outside diameter (nominal/actual):

⅜ inch/0.394 inch (10 mm)

½ inch/0.512 inch (13 mm)

⅝ inch/0.630 inch (16 mm)

Ceramic end caps:

⅜ inch tube: 11⁄16 inch dia. X ½ inch long (16 X 13 mm)

½ inch tube: ¾ inch dia. X ½ inch long (19 X 13 mm)

⅝ inch tube: 15⁄16 inch dia. X ½ inch long (22 X 13 mm)

Available lengths: 8 inches to 72 inches (200 mm to 1829 mm) ⅜ inch diameter, 60 inch maximum length

Length tolerances:

Sheath: ±⅛ inch (3.2 mm)
Heated length: ±¼ inch (6.3 mm)

No-Heat length: 1 inch (25 mm) standard

Screw terminal: 10-24 thread

Termination: Type T1, T2, T3, T4, T5, T6

Electrical

Resistance tolerance:

NEMA standard +10 percent, -5 percent

Wattage tolerance:

NEMA standard +5 percent, -10 percent

Maximum volts: Consult factory

Maximum amperage: 20A

Maximum watt density:

Consult factory

Standard Terminations

Type T1

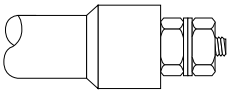

Standard termination: 10-24 stainless steel screw thread terminals.

Type T2

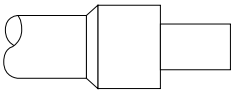

Quick disconnect fuse style: 7⁄16 inch dia. X ½ inch long (9.5 mm X 12.7 mm) terminals.

Type T3

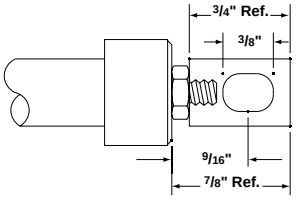

Tabs with slotted holes: SS Tabs ½ inch wide X ¾ inch long (12.7 mm X 19 mm). Slots 9⁄32 inch X ⅜ inch (7.1 mm X 9.5 mm).

Type T4

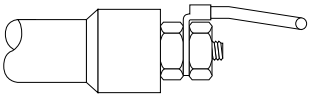

Flexible lead termination: 12-inch flexible leads; if longer leads are required, please specify.

Type T5

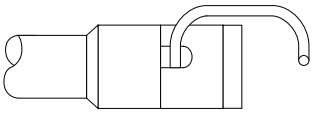

Flexible lead termination: 10-24 SS screw thread terminals insulated with ceramic terminal covers. Terminals are pre-wired with 12-inch flexible lead wire. If longer leads are required, please specify.

Type T6

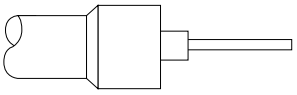

12-inch flexible leads exit the ceramic cap. There are no post terminals. Please specify if longer leads are required.

Mounting Frames for Watlow Quartz Heaters

See Raymax 1626 on **page 223**.